WOOD FRAMED DOOR FLASHING OVER CONCRETE SUBSTRATES
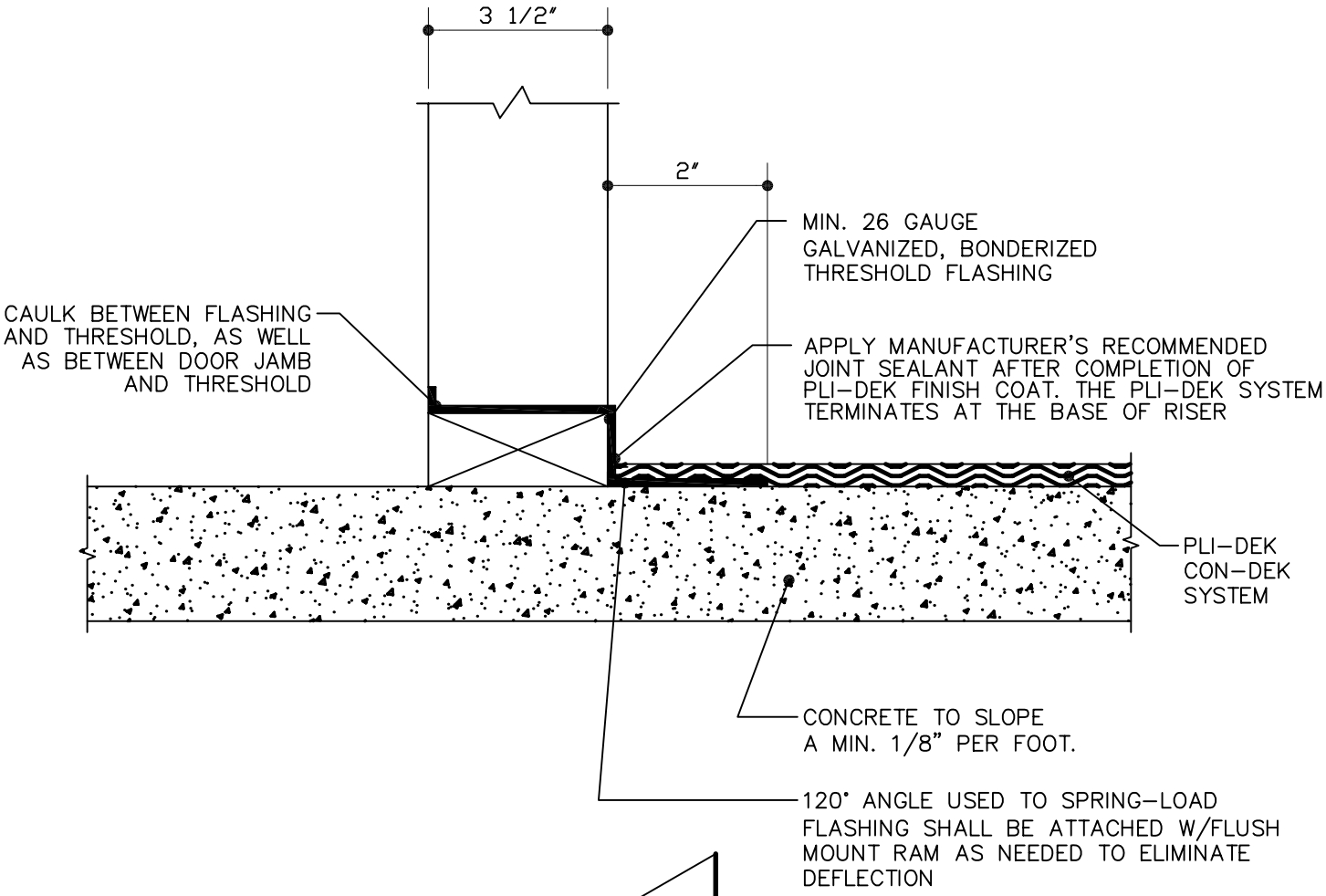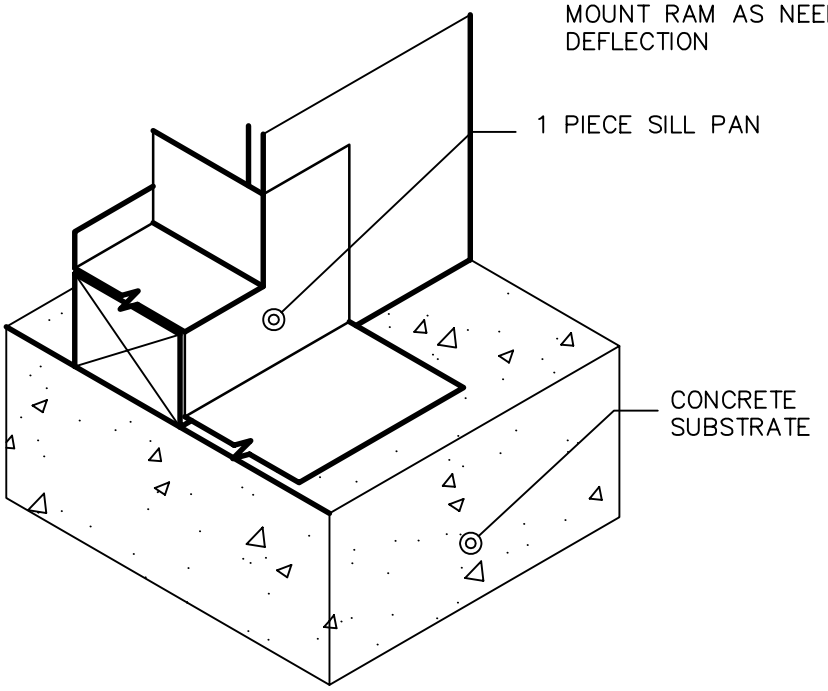
DETAIL 1C