TUBE STEEL DECK RAIL
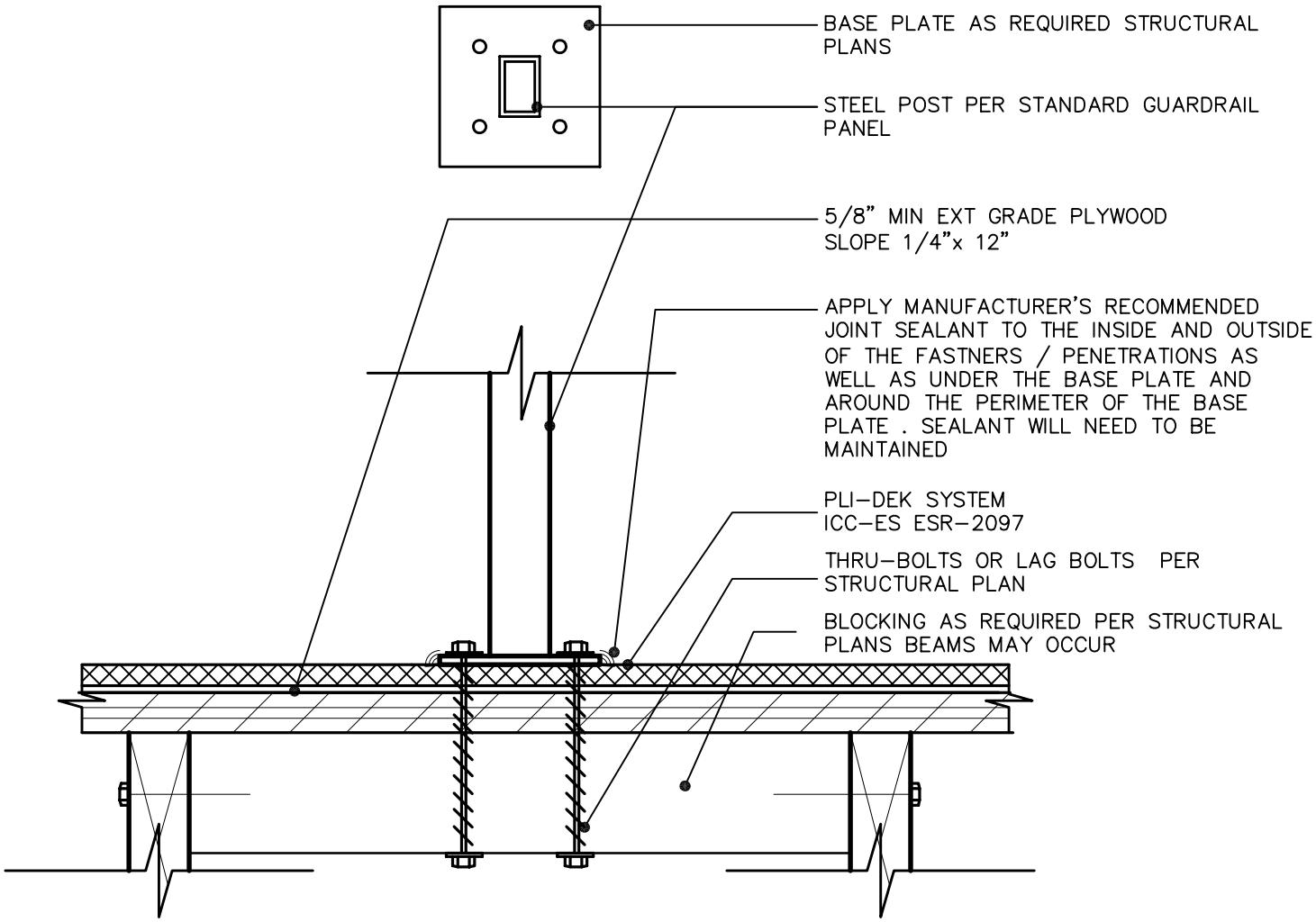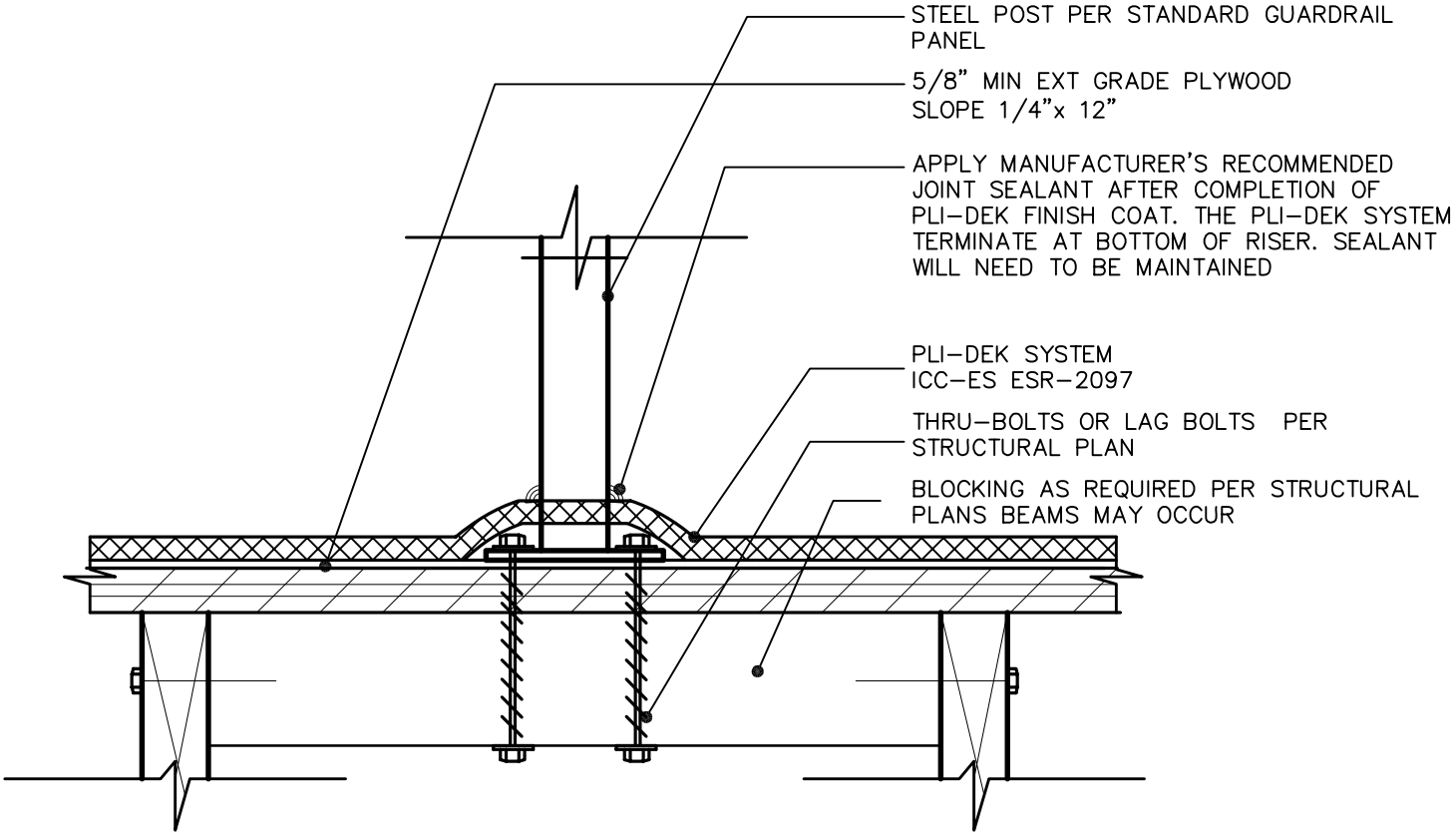
DETAIL 3C