SCUPPER
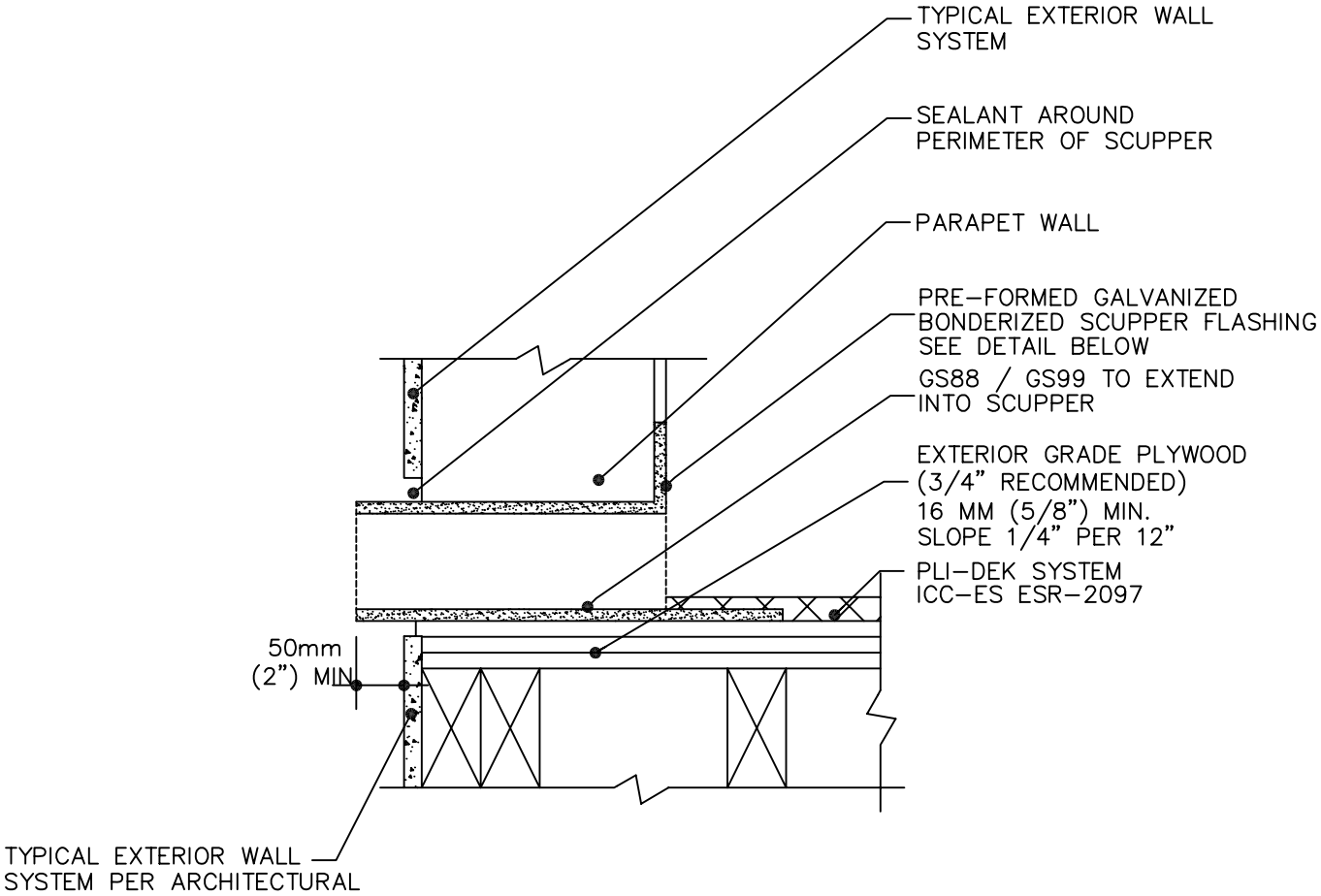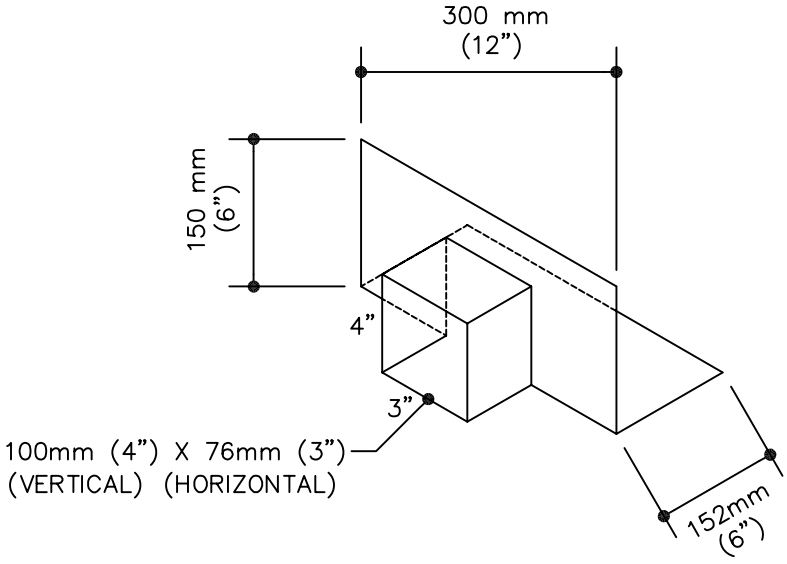
DETAIL 4