DOOR PAN FLASHING
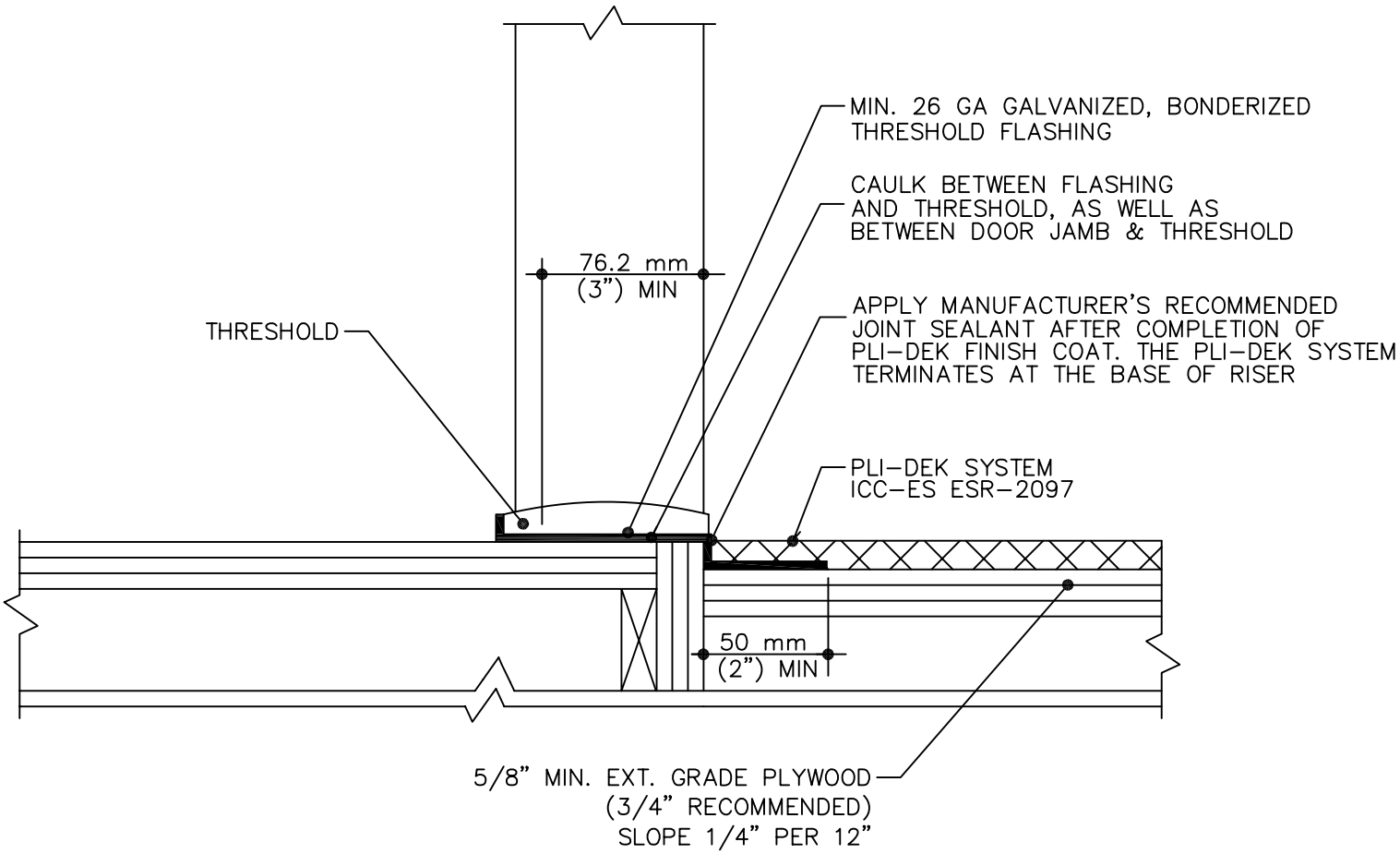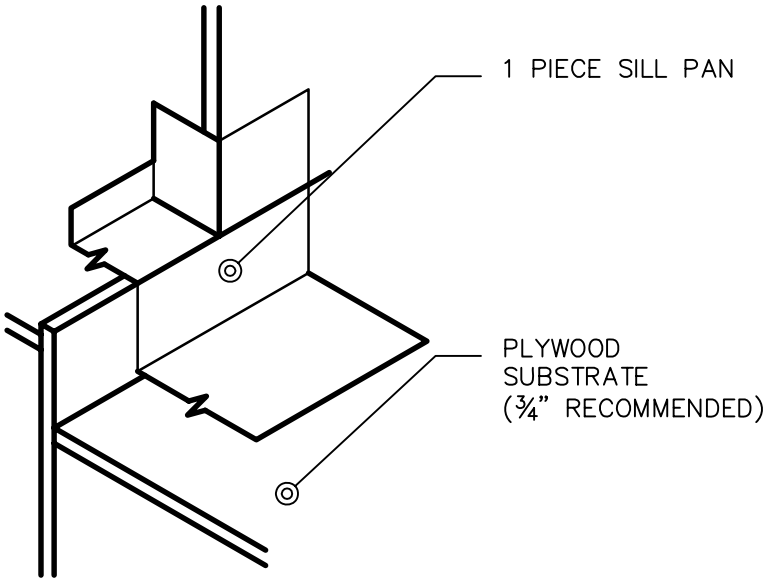
SINGLE FLASHING FOR 0 TO 50mm (2") STEP-UP
DETAIL 1A